# 2. AT Shift Lock Control System

## A: LOCATION

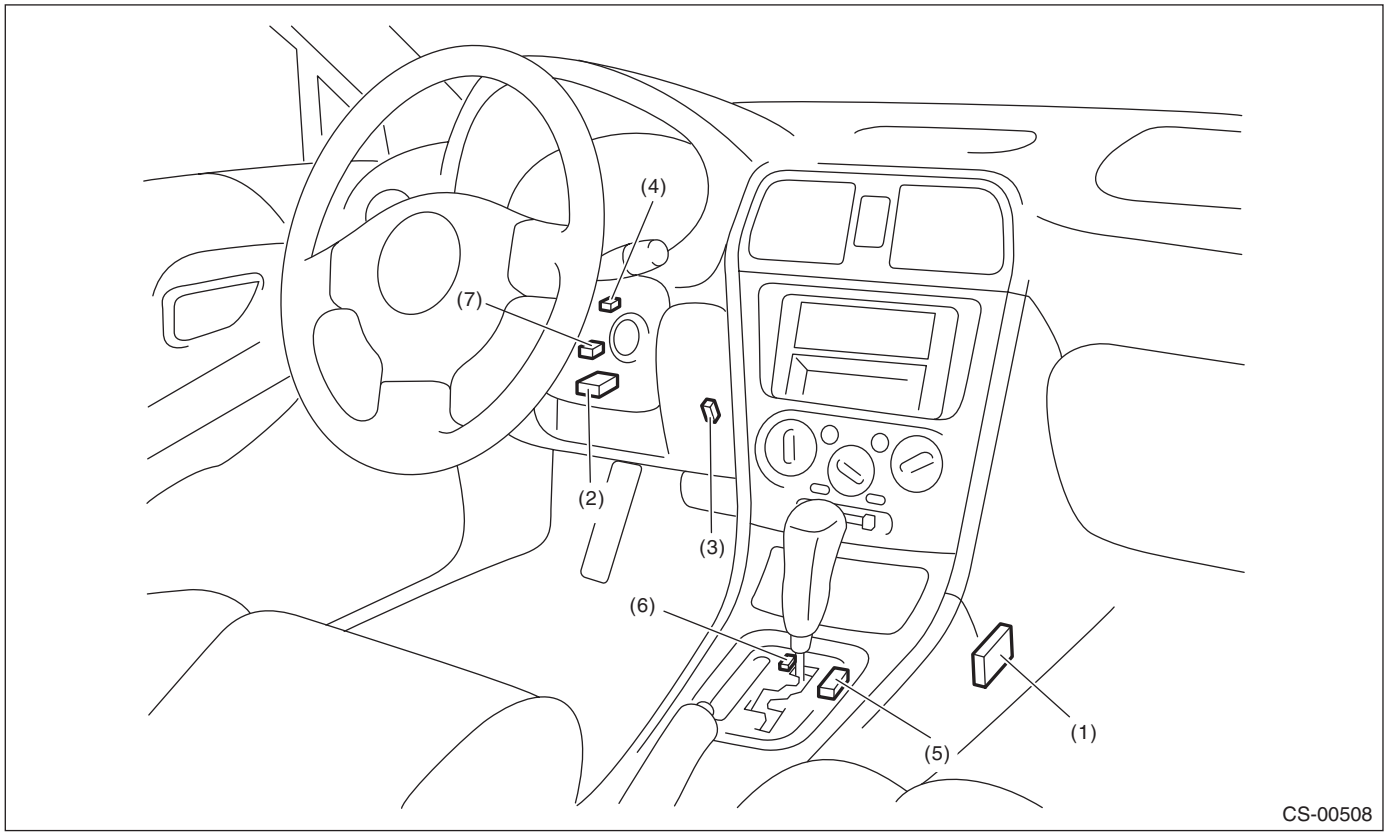


(1) Inhibitor switch
(2) Body integrated unit
(3) Stop light switch
(4) Key warning switch
(5) Shift lock solenoid
(6) “P” range switch
(7) Key lock solenoid

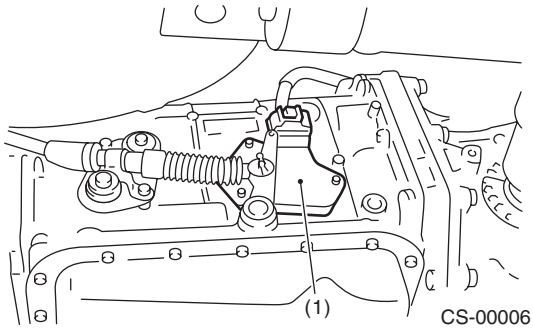
(1)
CS-00006

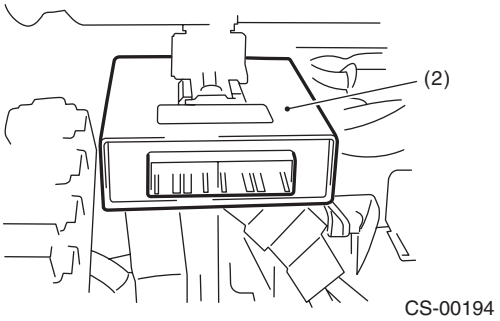
(2)
CS-00194

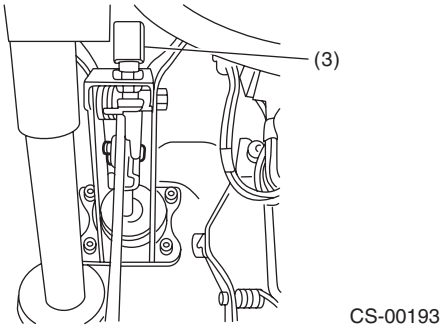
(3)
CS-00193

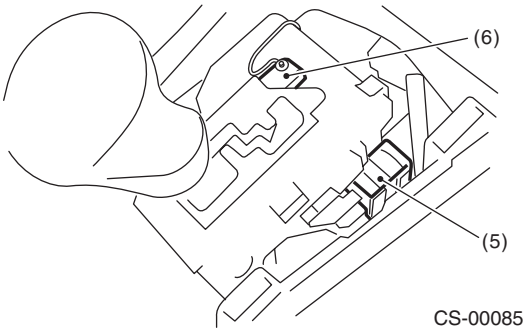
(6)
(5)
CS-00085

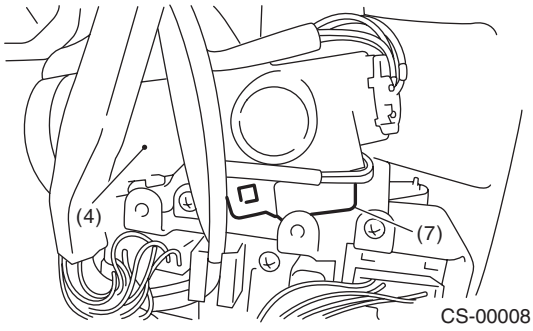
(4)
(7)
CS-00008

## B: ELECTRICAL SPECIFICATION

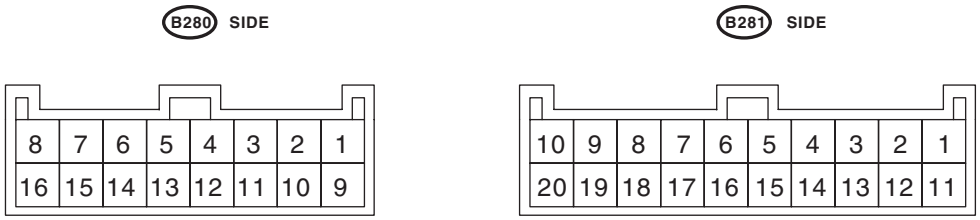


CS-00011

| Item | To connector No. | Terminal No. | Input/Output signal<br>Measured value and measuring conditions |
|---|---|---|---|
| Battery power supply | B280 | 2 | 9 — 16 V |
| Ignition power supply | B281 | 19 | 10 — 15 V when ignition switch is at ON or START. |
| Ignition power supply | B281 | 10 | 10 — 15 V when ignition switch is at ACC. |
| Inhibitor switch<br>(“P” range) | B281 | 5 | 0 V when select lever is in “P” range.<br>9 — 16 V when select lever is in other positions than “P” range. |
| Stop light switch | B281 | 9 | 9 — 16 V when stop light switch is ON.<br>0 V when stop light switch is OFF. |
| “P” range switch | B281 | 6 | 0 V when select lever is in “P” range.<br>9 — 16 V when select lever is in other positions than “P” range. |
| Shift lock solenoid signal | B280 | 9 | 8.5 — 16 V when shift lock is released.<br>0 V when shift lock is operating. |
| Key warning switch signal | B281 | 20 | 9 — 16 V when key is inserted.<br>0 V when key is removed. |
| Key lock solenoid signal | B280 | 3 | 7.5 — 16 V when ignition switch is turned ON, with select lever in “P” range and brake switch ON.<br>0 V at other conditions than above. |
| Ground | B280 | 4 | — |
| Ground | B280 | 13 | — |

## C: WIRING DIAGRAM

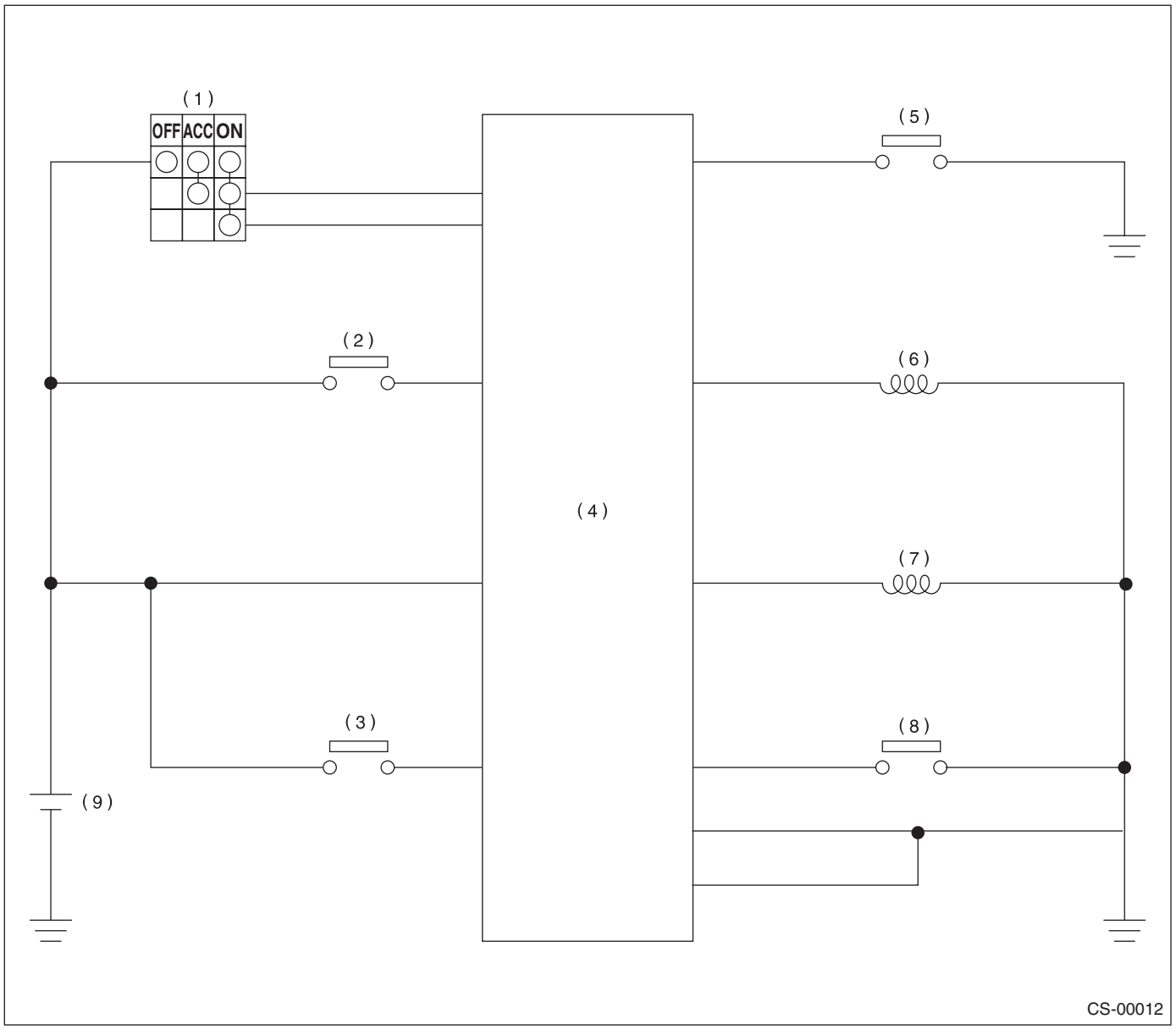


(1) Ignition switch
(2) Stop light switch
(3) Key warning switch
(4) Body integrated unit
(5) Inhibitor switch
(6) Key lock solenoid
(7) Shift lock solenoid
(8) “P” range switch
(9) Battery

# D: INSPECTION

## 1. SHIFT LOCK OPERATION

| Step | Check | Yes | No |
|---|---|---|---|
| 1 **CHECK SHIFT LOCK.**<br>1) Turn the ignition switch to ON.<br>2) Move the select lever to “P” range. | While brake pedal is not depressed, can the select lever move from “P” range to other ranges? | After inspecting “POWER SUPPLY AND GROUND CIRCUIT FOR BODY INTEGRATED UNIT”, inspect “SHIFT LOCK OF SELECT LEVER DOES NOT OPERATE”. <Ref. to CS-13, BODY INTEGRATED UNIT POWER SUPPLY AND GROUND CIRCUIT, INSPECTION, AT Shift Lock Control System.> <Ref. to CS-17, SHIFT LOCK OF SELECT LEVER DOES NOT OPERATE, INSPECTION, AT Shift Lock Control System.> | Go to step **2**. |
| 2 **CHECK SHIFT LOCK.** | While brake pedal is depressed, can select lever move from “P” range to other ranges? | Go to step **3**. | Inspect “SELECT LEVER CANNOT BE SHIFTED”. <Ref. to CS-15, SELECT LEVER CANNOT BE SHIFTED, INSPECTION, AT Shift Lock Control System.> |
| 3 **CHECK STEERING LOCK.** | When the select lever is set to except for “P” range, can the ignition switch be turned to the “LOCK” position? | Inspect “STEERING LOCK DOES NOT BE LOCKED OR RELEASED”. <Ref. to CS-17, SHIFT LOCK OF SELECT LEVER DOES NOT OPERATE, INSPECTION, AT Shift Lock Control System.> | Go to step **4**. |

| Step | Check | Yes | No |
|---|---|---|---|
| **4 CHECK STEERING LOCK.** | When the select lever is in the “P” range, can the ignition switch be turned to the “LOCK” position? | AT shift lock system is normal. | Inspect “STEERING LOCK DOES NOT BE LOCKED OR RELEASED”. <Ref. to CS-17, SHIFT LOCK OF SELECT LEVER DOES NOT OPERATE, INSPECTION, AT Shift Lock Control System.> |

## 2. BODY INTEGRATED UNIT POWER SUPPLY AND GROUND CIRCUIT

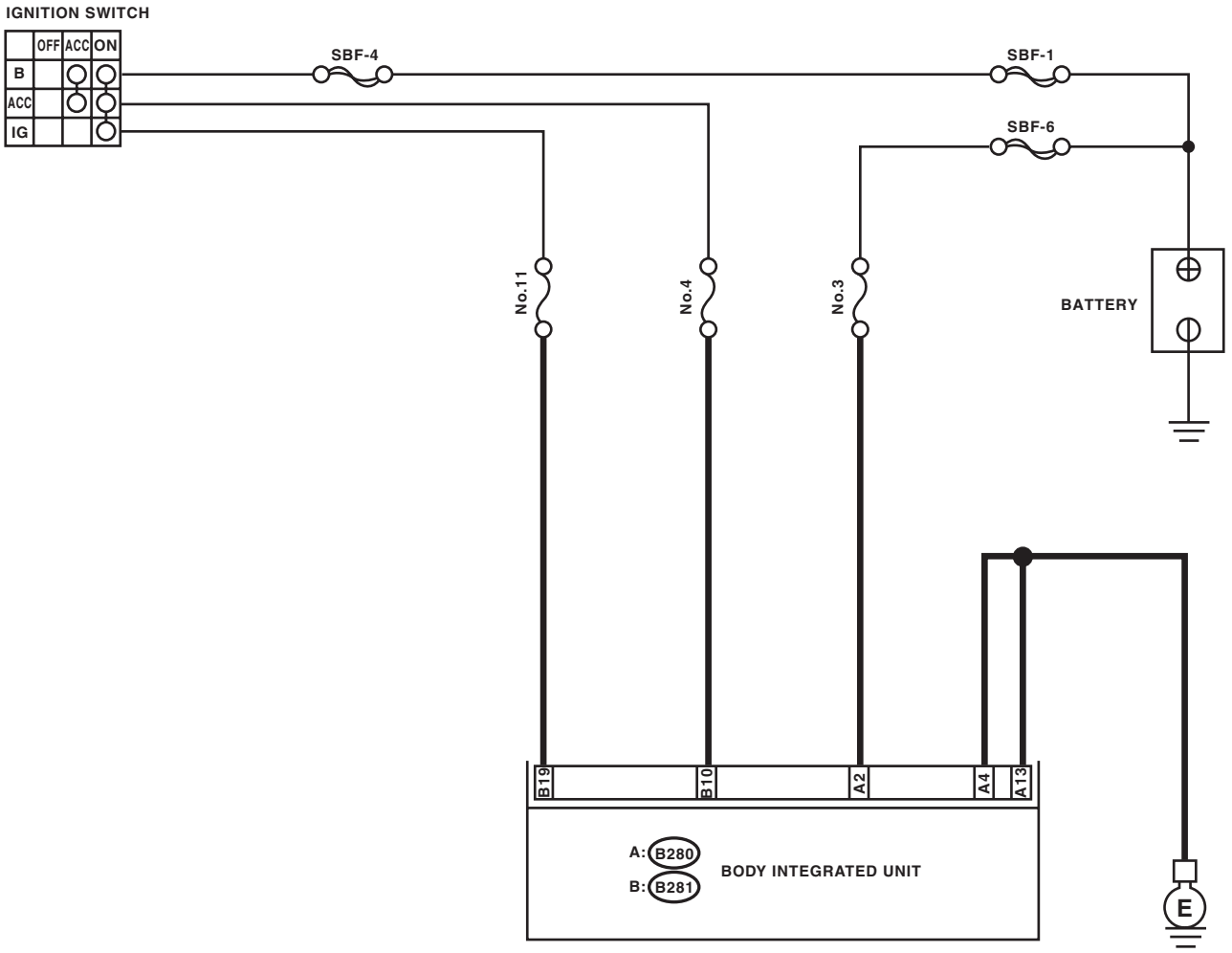


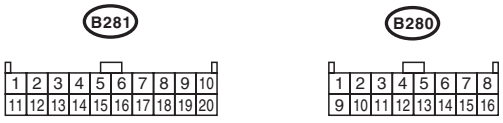


CS-00258

| | Step | Check | Yes | No |
|---|---|---|---|---|
| 1 | **CHECK FUSE.**<br>Remove the fuses No. 3, 4 and 11. | Are the fuses No. 3, 4 and 11 blown? | Replace the fuses No. 3, 4 and 11. If the replaced fuse No. 3, 4 or 11 blows out easily, repair the short circuit of harness between the fuse and body integrated unit. | Go to step **2**. |
| 2 | **CHECK HARNESS CONNECTOR BETWEEN BODY INTEGRATED UNIT AND CHASSIS GROUND.**<br>1) Turn the ignition switch to OFF.<br>2) Measure the harness resistance between the body integrated unit and chassis ground.<br>***Connector & terminal***<br>***(B280) No. 4 — Chassis ground:***<br>***(B280) No. 13 — Chassis ground:*** | Is the resistance less than 1 Ω? | Go to step **3**. | Repair the open circuit of harness between the body integrated unit and chassis ground. |
| 3 | **CHECK BATTERY POWER SUPPLY.**<br>1) Turn the ignition switch to ON. (engine OFF)<br>2) Check the voltage between body integrated unit and chassis ground.<br>***Connector & terminal***<br>***(B280) No. 2 (+) — Chassis ground (–):*** | Is the voltage 9 V or more? | Go to step **4**. | Repair open circuit of the harness between battery and body integrated unit, and any poor contact in connectors. |
| 4 | **CHECK IGNITION POWER SUPPLY CIRCUIT.**<br>1) Turn the ignition switch to ACC.<br>2) Check the voltage between body integrated unit and chassis ground.<br>***Connector & terminal***<br>***(B281) No. 10 (+) — Chassis ground (–):*** | Is the voltage 9 V or more? | Go to step **5**. | Repair open circuit of the harness between battery and body integrated unit, and any poor contact in connectors. |
| 5 | **CHECK IGNITION POWER SUPPLY CIRCUIT.**<br>1) Turn the ignition switch to ON. (engine OFF)<br>2) Measure the voltage between body integrated unit and chassis ground.<br>***Connector & terminal***<br>***(B281) No. 19 (+) — Chassis ground (–):*** | Is the voltage 9 V or more? | Go to step **6**. | Repair open circuit of the harness between battery and body integrated unit, and any poor contact in connectors. |
| 6 | **CHECK POOR CONTACT.** | Is there poor contact in connector? | Repair the poor contact. | Replace the body integrated unit. |

## 3. SELECT LEVER CANNOT BE SHIFTED

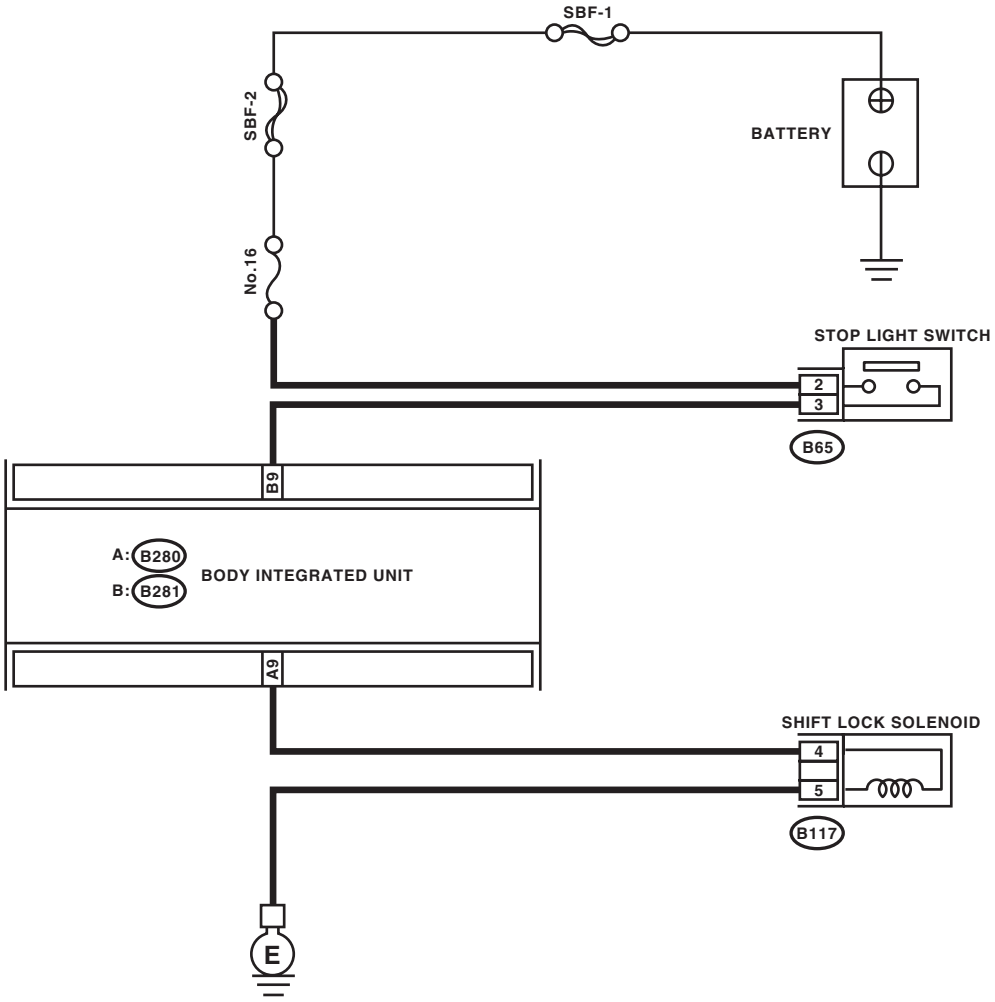


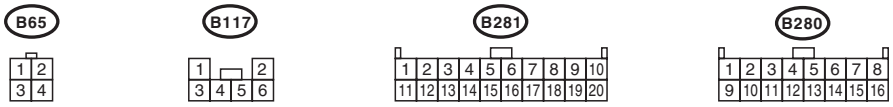


CS-00259

| | Step | Check | Yes | No |
|---|---|---|---|---|
| 1 | **CHECK STOP LIGHT SWITCH.**<br>Depress the brake pedal. | Does the stop light illuminate? | Go to step **2**. | Check the stop light system. |
| 2 | **CHECK HARNESS BETWEEN STOP LIGHT SWITCH AND BODY INTEGRATED UNIT.**<br>1) Turn the ignition switch to OFF.<br>2) Disconnect the connectors of body integrated unit and stop light switch.<br>3) Measure the resistance of harness between stop light switch and body integrated unit.<br>***Connector & terminal***<br>***(B65) No. 3 — (B281) No. 9:*** | Is the resistance 1 MΩ or more? | Repair the open circuit of harness between body integrated unit and stop light switch. | Go to step **3**. |
| 3 | **CHECK HARNESS BETWEEN STOP LIGHT SWITCH AND BODY INTEGRATED UNIT.**<br>Measure the resistance of harness between stop light switch and chassis ground.<br>***Connector & terminal***<br>***(B65) No. 3 — Chassis ground:*** | Is the resistance less than 1 Ω? | Repair the short circuit of harness between body integrated unit and stop light switch. | Go to step **4**. |
| 4 | **CHECK HARNESS BETWEEN BODY INTEGRATED UNIT AND SHIFT LOCK SOLENOID.**<br>1) Disconnect the connector of shift lock solenoid.<br>2) Measure the harness resistance between the body integrated unit and shift lock solenoid.<br>***Connector & terminal***<br>***(B117) No. 4 — (B280) No. 9:*** | Is the resistance 1 MΩ or more? | Repair the open circuit of harness between body integrated unit and shift lock solenoid. | Go to step **5**. |
| 5 | **CHECK HARNESS BETWEEN BODY INTEGRATED UNIT AND SHIFT LOCK SOLENOID.**<br>Measure the resistance of harness between shift lock solenoid and chassis ground.<br>***Connector & terminal***<br>***(B117) No. 4 — Chassis ground:*** | Is the resistance less than 1 Ω? | Repair the short circuit of harness between body integrated unit and shift lock solenoid. | Go to step **6**. |
| 6 | **CHECK HARNESS BETWEEN SHIFT LOCK SOLENOID AND CHASSIS GROUND.**<br>Measure the resistance of harness between shift lock solenoid and chassis ground.<br>***Connector & terminal***<br>***(B117) No. 5 — Chassis ground:*** | Is the resistance 1 MΩ or more? | Repair open circuit of harness between shift lock solenoid and chassis ground. | Go to step **7**. |
| 7 | **CHECK SHIFT LOCK SOLENOID.**<br>Measure the resistance of the shift lock solenoid connector terminals.<br>***Terminals***<br>***No. 4 — No. 5:*** | Is the resistance between 20 — 40 Ω? | Go to step **8**. | Replace the shift lock solenoid. |
| 8 | **CHECK SHIFT LOCK SOLENOID.**<br>Connect the battery to connector terminal of shift lock solenoid, and operate the solenoid.<br>***Terminals***<br>***No. 4 (+) — No. 5 (–):*** | Is the shift lock solenoid operating properly? | Go to step **9**. | Replace the shift lock solenoid. |
| 9 | **CHECK POOR CONTACT.** | Is there poor contact in connector? | Repair the poor contact. | Replace the body integrated unit. |

## 4. SHIFT LOCK OF SELECT LEVER DOES NOT OPERATE

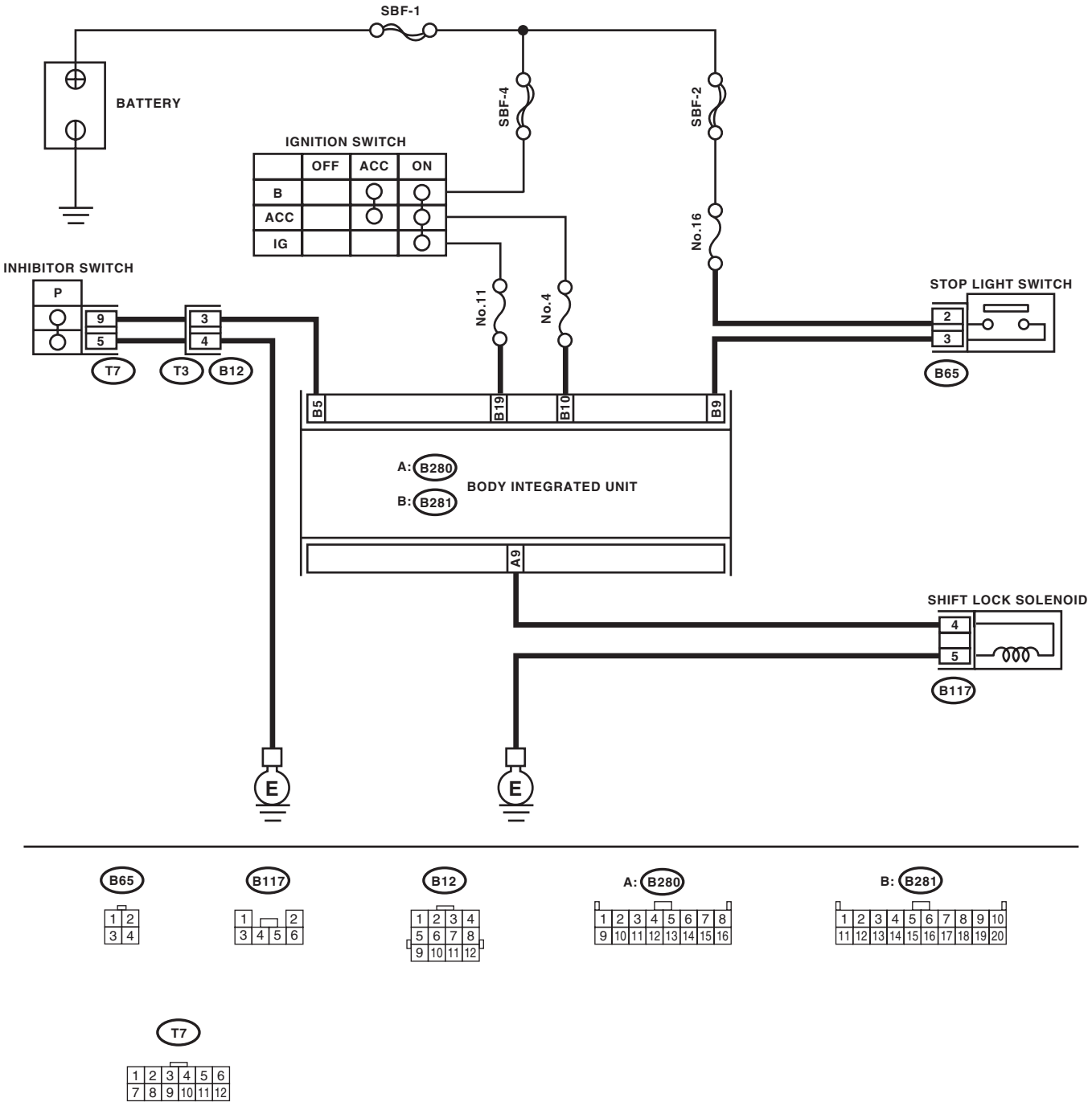


CS-00681

| | Step | Check | Yes | No |
|---|---|---|---|---|
| 1 | **CHECK INHIBITOR SWITCH.**<br>1) Turn the ignition switch to ON. (engine OFF)<br>2) Move the select lever from “P” to “1” range. | Do the combination meter select indicator light match the select lever “P”, “R”, “N”, “3”, “2” and “1” range? | Go to step **2**. | Adjust inhibitor switch and select cable. |
| 2 | **CHECK IGNITION POWER SUPPLY CIRCUIT.**<br>1) Turn the ignition switch to ON. (engine OFF)<br>2) Measure the voltage between body integrated unit and chassis ground.<br>***Connector & terminal***<br>***(B281) No. 19 (+) — Chassis ground (–):*** | Is the voltage 9 V or more? | Go to step **3**. | Repair open circuit of the harness between battery and body integrated unit, and any poor contact in connectors. |
| 3 | **CHECK HARNESS BETWEEN INHIBITOR SWITCH AND BODY INTEGRATED UNIT.**<br>1) Turn the ignition switch to OFF.<br>2) Disconnect the connectors of transmission harness and body integrated unit.<br>3) Measure the harness resistance between the body integrated unit and chassis ground.<br>***Connector & terminal***<br>***(B281) No. 5 — Chassis ground:*** | Is the resistance less than 1 Ω? | Repair the short circuit of harness between body integrated unit and transmission connector. | Go to step **4**. |
| 4 | **CHECK HARNESS BETWEEN INHIBITOR SWITCH AND BODY INTEGRATED UNIT.**<br>Measure the harness resistance between body integrated unit and inhibitor switch.<br>***Connector & terminal***<br>***(B12) No. 3 — (B281) No. 5:*** | Is the resistance 1 MΩ or more? | Repair the open circuit of the harness between the body integrated unit and transmission connector. | Go to step **5**. |
| 5 | **CHECK HARNESS BETWEEN INHIBITOR SWITCH AND CHASSIS GROUND.**<br>Measure the harness resistance between the body integrated unit and chassis ground.<br>***Connector & terminal***<br>***(B12) No. 4 — Chassis ground:*** | Is the resistance less than 1 Ω? | Go to step **6**. | Repair the open circuit of harness between the body integrated unit and chassis ground. |
| 6 | **CHECK INHIBITOR SWITCH.**<br>1) Move the select lever to “P” range.<br>2) Measure the resistance between transmission harness connector terminals.<br>***Connector & terminal***<br>***(T3) No. 3 — No. 4:*** | Is the resistance 1 MΩ or more? | Repair or replace inhibitor switch. | Go to step **7**. |
| 7 | **CHECK OUTPUT SIGNAL OF BODY INTEGRATED UNIT.**<br>1) Connect all the connectors.<br>2) Turn the ignition switch to ON.<br>3) Measure the voltage between body integrated unit and chassis ground.<br>***Connector & terminal***<br>***(B281) No. 5 (+) — Chassis ground (–):*** | Is the voltage 9 — 16 V? | Go to step **8**. | Go to step **16**. |
| 8 | **CHECK STOP LIGHT SWITCH.**<br>Depress the brake pedal. | Does the stop light illuminate? | Go to step **9**. | Check the stop light system. |
| 9 | **CHECK HARNESS BETWEEN STOP LIGHT SWITCH AND AT SHIFT LOCK CONTROL MODULE.**<br>1) Depress the brake pedal.<br>2) Measure the voltage between body integrated unit and chassis ground.<br>***Connector & terminal***<br>***(B281) No. 9 (+) — Chassis ground (–):*** | Is the voltage 9 V or more? | Go to step **10**. | Repair the harness for open or short circuit between body integrated unit and stop light switch. |

| Step | | Check | Yes | No |
|---|---|---|---|---|
| 10 | **CHECK HARNESS BETWEEN BODY INTEGRATED UNIT AND SHIFT LOCK SOLENOID.**<br>1) Turn the ignition switch to OFF.<br>2) Disconnect the connectors of shift lock solenoid and body integrated unit.<br>3) Measure the harness resistance between the body integrated unit and shift lock solenoid.<br>***Connector & terminal***<br>***(B280) No. 9 — (B117) No. 4:*** | Is the resistance 1 MΩ or more? | Repair the open circuit of harness between body integrated unit and shift lock solenoid. | Go to step **11**. |
| 11 | **CHECK HARNESS BETWEEN BODY INTEGRATED UNIT AND SHIFT LOCK SOLENOID.**<br>Measure the resistance of harness between shift lock solenoid and chassis ground.<br>***Connector & terminal***<br>***(B280) No. 9 — Chassis ground:*** | Is the resistance less than 10 Ω? | Go to step **12**. | Repair the short circuit of harness between body integrated unit and shift lock solenoid. |
| 12 | **CHECK HARNESS BETWEEN SHIFT LOCK SOLENOID AND CHASSIS GROUND.**<br>Measure the resistance of harness between shift lock solenoid and chassis ground.<br>***Connector & terminal***<br>***(B117) No. 5 — Chassis ground:*** | Is the resistance less than 1 Ω? | Go to step **13**. | Repair open circuit of harness between shift lock solenoid and chassis ground. |
| 13 | **CHECK SHIFT LOCK SOLENOID.**<br>Measure the resistance of the shift lock solenoid connector terminals.<br>***Terminals***<br>***No. 4 — No. 5:*** | Is the resistance between 20 — 40 Ω? | Go to step **14**. | Replace the shift lock solenoid. |
| 14 | **CHECK SHIFT LOCK SOLENOID.**<br>Connect the battery to connector terminal of shift lock solenoid, and operate the solenoid.<br>***Terminals***<br>***No. 4 (+) — No. 5 (–):*** | Is the shift lock solenoid operating properly? | Go to step **15**. | Replace the shift lock solenoid. |
| 15 | **CHECK OUTPUT SIGNAL FOR AT SHIFT LOCK CONTROL MODULE.**<br>1) Turn the ignition switch to ON. (engine OFF)<br>2) Measure the voltage between body integrated unit and chassis ground.<br>***Connector & terminal***<br>***(B280) No. 9 (+) — Chassis ground (–):*** | Is the voltage 8.5 V or more? | Go to step **16**. | Replace the body integrated unit. |
| 16 | **CHECK POOR CONTACT.** | Is there poor contact in connector? | Repair the poor contact. | Replace the body integrated unit. |

## 5. STEERING LOCK DOES NOT LOCK OR RELEASE

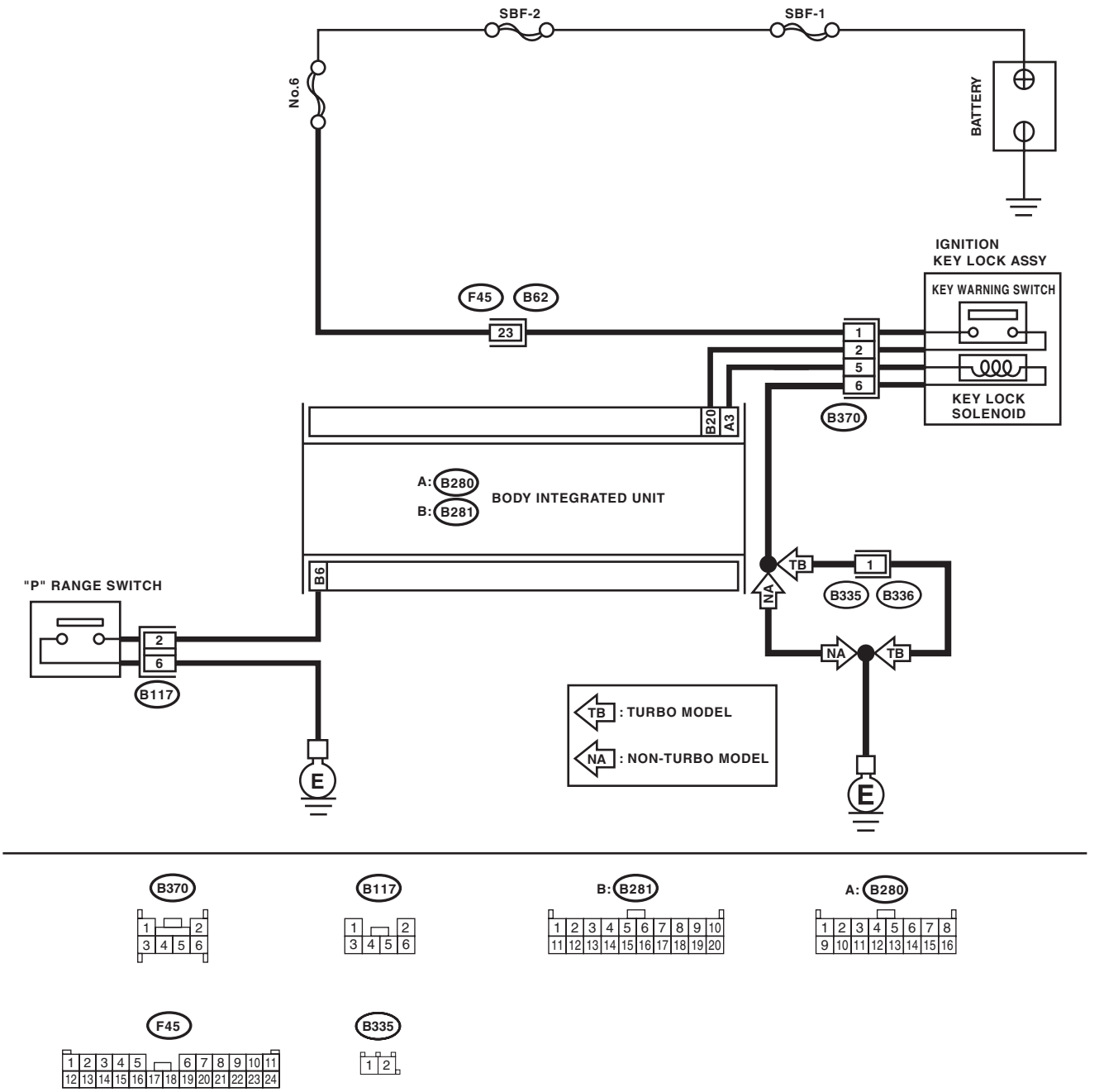


CS-00810

| | Step | Check | Yes | No |
|---|---|---|---|---|
| 1 | **CHECK HARNESS BETWEEN BATTERY AND KEY WARNING SWITCH.**<br>1) Disconnect the connector of key warning switch.<br>2) Measure the voltage of harness between key warning switch and chassis ground.<br>***Connector & terminal***<br>***(B370) No. 1 (+) — Chassis ground (–):*** | Is the voltage 9 — 16 V? | Go to step **2**. | Repair the open or short circuit of harness between battery and key warning switch. |
| 2 | **CHECK KEY WARNING SWITCH.**<br>Measure the resistance between connector terminals of key warning switch.<br>***Terminals***<br>***No. 1 — No. 2:*** | Is the resistance 1 MΩ or more? | Replace the key warning switch. | Go to step **3**. |
| 3 | **CHECK KEY WARNING SWITCH.**<br>1) Remove the key.<br>2) Measure the resistance between connector terminals of key warning switch.<br>***Terminals***<br>***No. 1 — No. 2:*** | Is the resistance 1 MΩ or more? | Go to step **4**. | Replace the key warning switch. |
| 4 | **CHECK HARNESS BETWEEN AT SHIFT LOCK CONTROL MODULE AND KEY WARNING SWITCH.**<br>1) Disconnect the body integrated unit connector.<br>2) Measure the voltage between body integrated unit and chassis ground.<br>***Connector & terminal***<br>***(B281) No. 20 (+) — Chassis ground (–):*** | Is the voltage 9 V or more? | Go to step **5**. | Repair the open circuit of harness between body integrated unit and key warning switch. |
| 5 | **CHECK HARNESS BETWEEN BODY INTEGRATED UNIT AND KEY LOCK SOLENOID.**<br>1) Disconnect the connector key lock solenoid.<br>2) Measure the resistance of harness between body integrated unit and key lock solenoid.<br>***Connector & terminal***<br>***(B370) No. 5 — (B280) No. 3:*** | Is the resistance 1 MΩ or more? | Repair the open circuit of harness between body integrated unit and key lock solenoid. | Go to step **6**. |
| 6 | **CHECK HARNESS BETWEEN BODY INTEGRATED UNIT AND KEY LOCK SOLENOID.**<br>Measure the harness resistance between the body integrated unit and chassis ground.<br>***Connector & terminal***<br>***(B280) No. 3 — Chassis ground:*** | Is the resistance 1 Ω or more? | Go to step **7**. | Repair the short circuit of harness between body integrated unit and key lock solenoid. |
| 7 | **CHECK HARNESS BETWEEN KEY LOCK SOLENOID AND CHASSIS GROUND.**<br>Measure the resistance of the harness between key lock solenoid and chassis ground.<br>***Connector & terminal***<br>***(B370) No. 6 — Chassis ground:*** | Is the resistance less than 10 Ω? | Go to step **8**. | Repair open circuit of harness between key lock solenoid and chassis ground. |
| 8 | **CHECK KEY LOCK SOLENOID.**<br>Measure the resistance of key lock solenoid connector terminals.<br>***Terminals***<br>***No. 5 — No. 6:*** | Is the resistance between 4 — 8 Ω? | Go to step **9**. | Replace the key lock solenoid. |
| 9 | **CHECK HARNESS BETWEEN "P" RANGE SWITCH AND CHASSIS GROUND.**<br>Measure the resistance of harness between "P" range switch and chassis ground.<br>***Connector & terminal***<br>***(B117) No. 2 — Chassis ground:*** | Is the resistance less than 1 Ω? | Go to step **10**. | Repair the short circuit of harness between "P" range switch and body integrated unit. |

| Step | | Check | Yes | No |
|---|---|---|---|---|
| 10 | **CHECK HARNESS BETWEEN AT SHIFT LOCK CONTROL MODULE AND "P" RANGE SWITCH.**<br>1) Disconnect the connector of the "P" range switch.<br>2) Measure the resistance of harness between the body integrated unit and the "P" range switch.<br>***Connector & terminal***<br>***(B117) No. 2 — (B281) No. 6:*** | Is the resistance 1 MΩ or more? | Repair the open circuit of harness between the body integrated unit and the "P" range switch. | Go to step **11**. |
| 11 | **CHECK HARNESS BETWEEN "P" RANGE SWITCH AND CHASSIS GROUND.**<br>Measure the resistance of harness between "P" range switch and chassis ground.<br>***Connector & terminal***<br>***(B117) No. 6 — Chassis ground:*** | Is the resistance 1 MΩ or more? | Repair the open circuit of harness between "P" range switch and chassis ground. | Go to step **12**. |
| 12 | **CHECK "P" RANGE SWITCH.**<br>1) Move the select lever to "P" range.<br>2) Measure the resistance between "P" range switch connector terminals.<br>***Terminals***<br>***No. 2 — No. 6:*** | Is the resistance less than 1 Ω? | Go to step **13**. | Replace the "P" range switch. |
| 13 | **CHECK "P" RANGE SWITCH.**<br>1) Shift the select lever to except for "P" range.<br>2) Measure the resistance between "P" range switch connector terminals.<br>***Terminals***<br>***No. 2 — No. 6:*** | Is the resistance 1 MΩ or more? | Go to step **14**. | Replace the "P" range switch. |
| 14 | **CHECK OUTPUT SIGNAL OF BODY INTEGRATED UNIT.**<br>1) Disconnect all the connectors.<br>2) Turn the ignition switch to ON. (engine OFF)<br>3) Move the select lever to "P" range.<br>4) Depress the brake pedal.<br>5) Measure the voltage between body integrated unit connector and chassis ground.<br>***Connector & terminal***<br>***(B280) No. 3 (+) — Chassis ground (–):*** | Is the voltage 7.5 — 16 V? | Go to step **15**. | Replace the body integrated unit. |
| 15 | **CHECK POOR CONTACT.** | Is there poor contact in connector? | Repair the poor contact. | Replace the body integrated unit. |